DIN41612 H15 Male Type

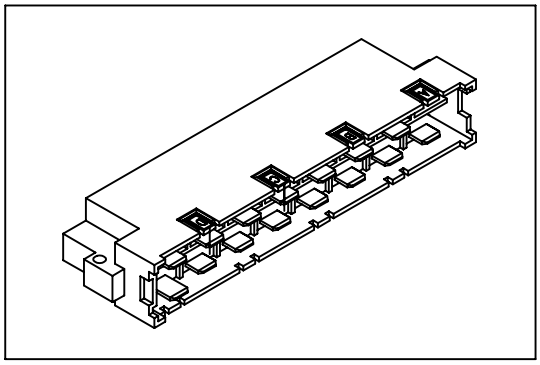

Material:

Housing: 30% Glass filled PBT UL94V-0.
Contacts: Brass.

Electrical Characteristics:

Current Rating: 15 AMP.
Dielectric Withstanding Voltage: AC 1000V For 1 minute.
Insulator Resistance: 1000MΩ min. at DC 500V.
Contact Resistance: 30mΩ max. at DC 100mA.
Operating Temperature: -55℃~+105℃.

Features:

* D41612 2 Row high power connectors.
* Current rated 15 Amp.
* Contact pitch 10.16mm.
* AG/NI Plating (alternative TIN/NI).

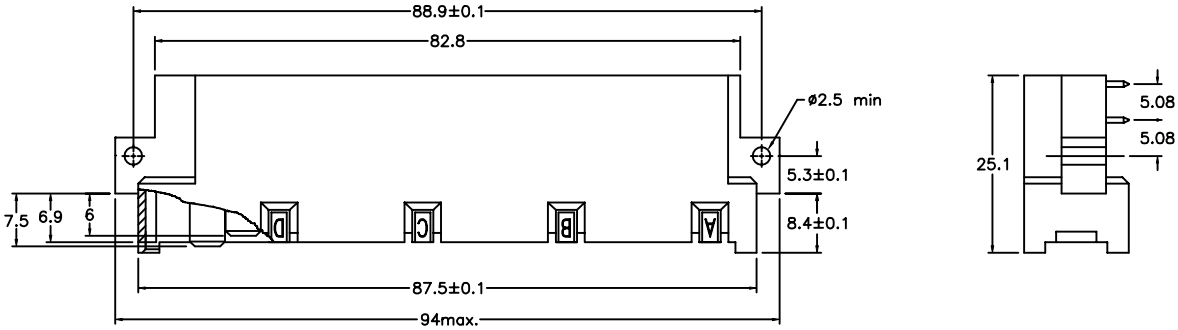

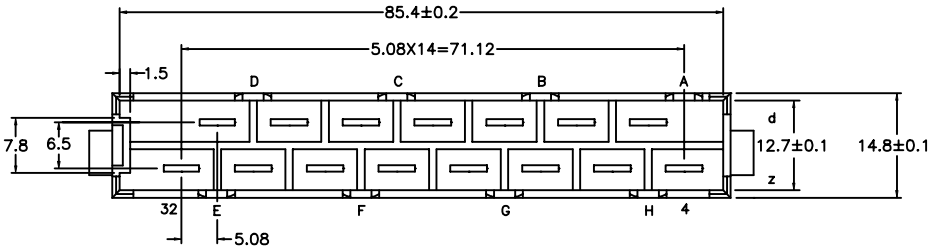

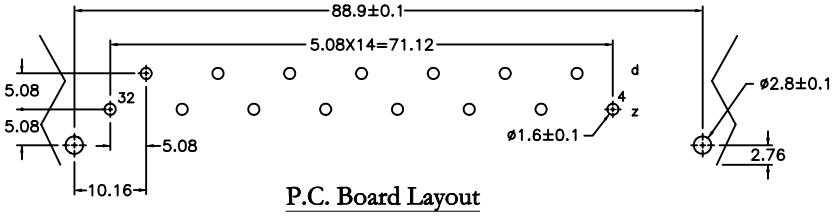

P.C. Board Layout

Ordering information

9001-	51	15	1	A
Series	1: Male	Position	1: Z32 Premating 1.5mm 2: Z4 & Z32 Premating 1.5mm	A: AG/NI Plating T: TIN/NI Plating

* Additional premating are available upon request, please consult factory.

Elektrosil GmbH, Ruhrstr 53, D-22761 Hamburg, Tel +49 40 840001-0, FAX +49 40 840001-65